VERIS
5-Hole Bath Combination
MODEL # 19362

Pure Freude an Wasser

GROHE

GROHE America, Inc | 200 North Gary Avenue, Suite G, Roselle, IL 60172
Phone: +1 (800) 444-7643 | Fax: +1 (800) 225-2778 | us-customerservice@grohe.com

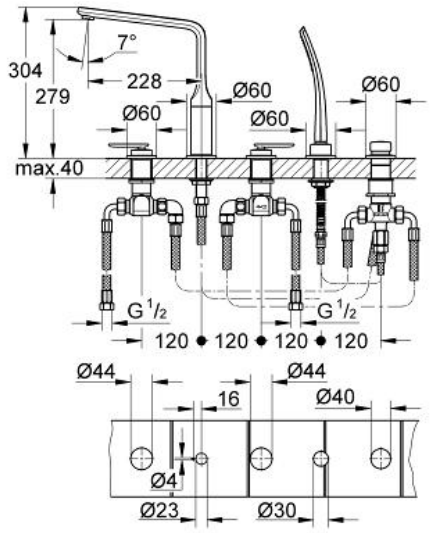

Product Description:
5-Hole Bath Combination

Standard Specification:
- **GROHE StarLight®** finish
- 1/2" ceramic cartridge (90° turn)
- Pre-assembled spout mounting
- Swivel bath inlet with flow control
- Bath/shower diverter
- 79" metal shower hose
- Mounting plate
- Connection for shower hose
- **Protected against backflow**
- Can be used with 29 037 000
- Min. recommended pressure: 15 psi

Applicable Codes & Standards:
- Energy Policy Act of 1992
- ASME A112.18.1/CSA B125.1
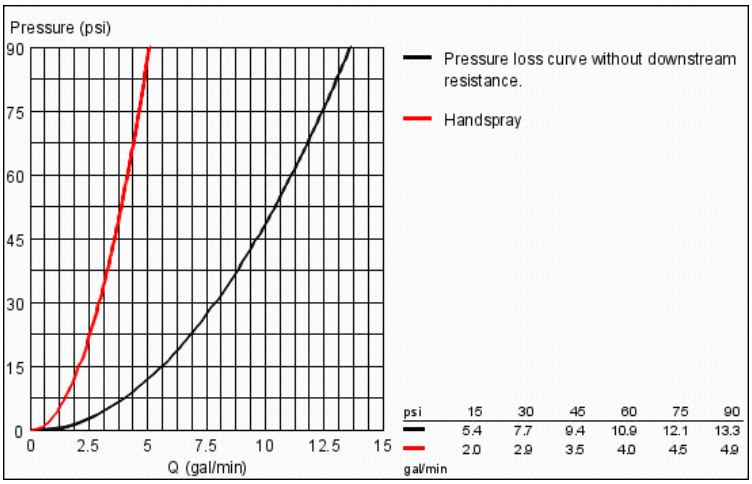
Color:
❑ 19362 000 chrome